K-MAX® PERFORMANCE, WEIGHT AND DIMENSIONS

WEIGHTS/MEASURES	ENGLISH	METRIC
Aircraft Maximum Gross Weight		
With External Load	12,000 lb	5,433 kg
Without External Load	6,500 lb	2,948 kg
Aircraft Empty Weight (Approx)	5,145 lb	2,334 kg
Aircraft Useful Load	6,855 lb	3,109 kg
Cargo Hook Capacity	6,000 lb	2,722 kg

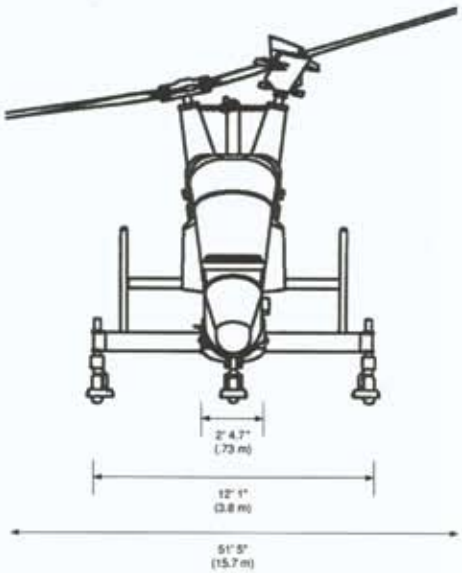

FUEL SYSTEM		
Total Fuel Capacity	228.5 US gal	865 liters
Fuel Weight - Jet A	1,553.8 lb	704.8 kg
Average Fuel Consumption	82 g/hr	310.4 l/hr
Fuel Consumption - Jet A	557.6 lb/hr	252.9 kg/hr

POWERPLANT	
Model	Allied Signal T53-17A-1 gas turbine
Thermodynamic Rating	1,800 Shaft Horsepower
Maximum Engine Rating	1,500 Shaft Horsepower
K-1200 Maximum Required	1,350 Shaft Horsepower

AIRSPEED LIMITATIONS		
Maximum speed without external load	100 knots	185.2 k/hr
Maximum speed with external load	80 knots	148.2 k/hr

ROTOR SYSTEM		
Rotor System	2 side-by-side, intermeshing, counter-rotating, all composite rotors, with servo flap rotor control	
Rotor Diameter	48'4"	14.7 m
Articulation	Semi-articulated system, hubs are free to teeter; blades are free to lead-lag; friction dampers between blade pairs	

HOVER PERFORMANCE*		
STANDARD DAY - SEA LEVEL		
Hover in Ground Effect (HIGE)	12,000 lb	5,443 kg
Hover our of Ground Effect (HOGE)	12,000 lb	5,443 kg
4,000 Feet at 35° C (95° F)		
Hover in Ground Effect (HIGE)	12,000 lb	5,443 kg
Hover our of Ground Effect (HOGE)	11,600 lb	5,262 kg

LIFT PERFORMANCE*		
Altitude (Temp: ISA + 15°C)		
Sea Level	6,000 lb	2,727 kg
5,000 Feet	5,663 lb	2,574 kg
10,000 Feet	5,163 lb	2,347 kg
12,500 Feet	5,013 lb	2,279 kg
15,000 Feet	4,313 lb	1,960 kg

* NOTE: Performance estimates assume a typically powered aircraft (Min. Spec. + 40° C + 200 lb pilot, +1.5 hr fuel)

SUPERIOR HELICOPTER, LLC
2794 Foothill Blvd. • Grants Pass, Oregon 97526
ph. 541-832-1166 • Fax 541-832-1184 • www. superiorhelicopter. com

specifications and drawings courtesy of Kaman Aerospace